# GCCR582

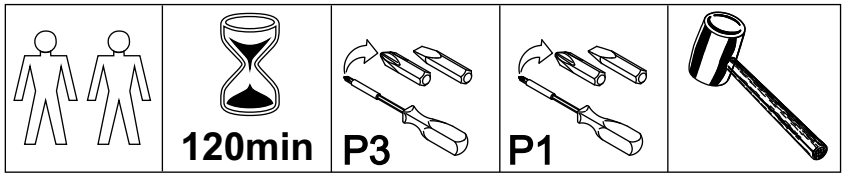


**Thank you for choosing this furniture.**

**BEFORE YOU START ASSEMBLY** please store the carton at room temperature for 48 hours or more so the contents can acclimatise.

**PLEASE RETAIN ALL PACKING UNTIL YOU HAVE COMPLETED ASSEMBLY.**

**Information about your Pine furniture.**
Our pine furniture ranges have been carefully crafted from solid wood and wood fibre based composite boards. Each piece of pine has unique characteristics such as knots, variances in shading and graining. These are part of the natural character of the furniture itself.

**Caring for your Pine furniture.**
Extreme temperature can cause slight movements in the wood itself so please avoid placing your furniture close to radiators or other direct sources of heat. Humidity should also be avoided.
Please avoid exposing your furniture to continued bright sunlight as it can affect the colour.
Any fluid spills should be removed as quickly as possible.
Always lift your furniture when moving as dragging may cause damage to your furniture or flooring.

**After care.**
Wipe the surfaces with a dry cloth and an occasional use of a normal household furniture polish. For the models with drawers, we also recommend you use household spray polish occasionally on drawer grooves and runners as this will aid use. Please do not use detergents or chemicals on your furniture.

## PARTS LIST

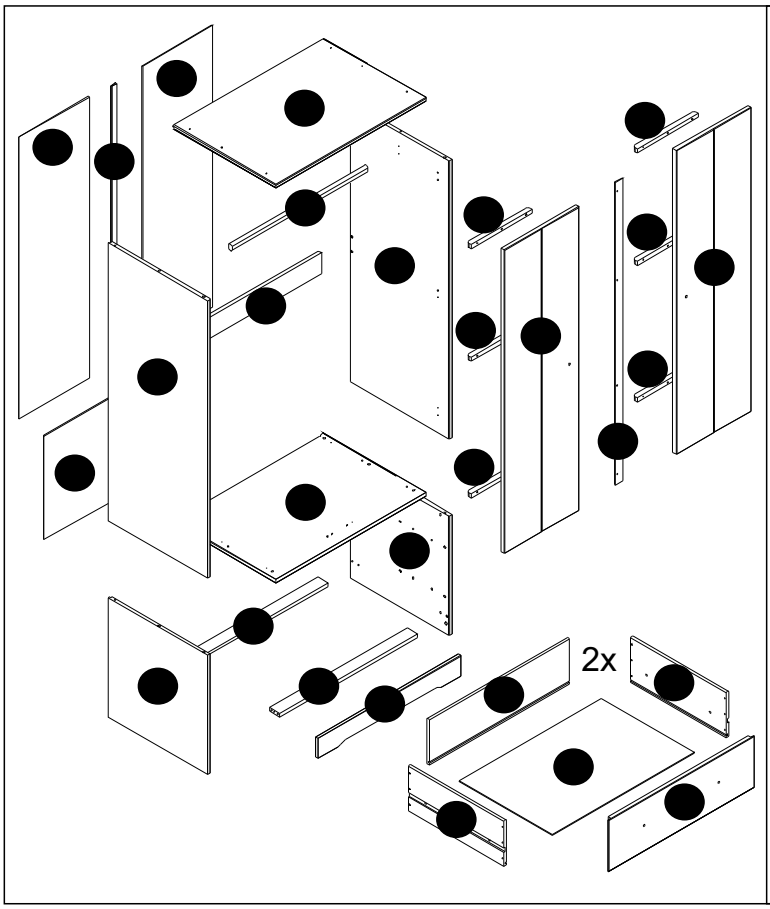


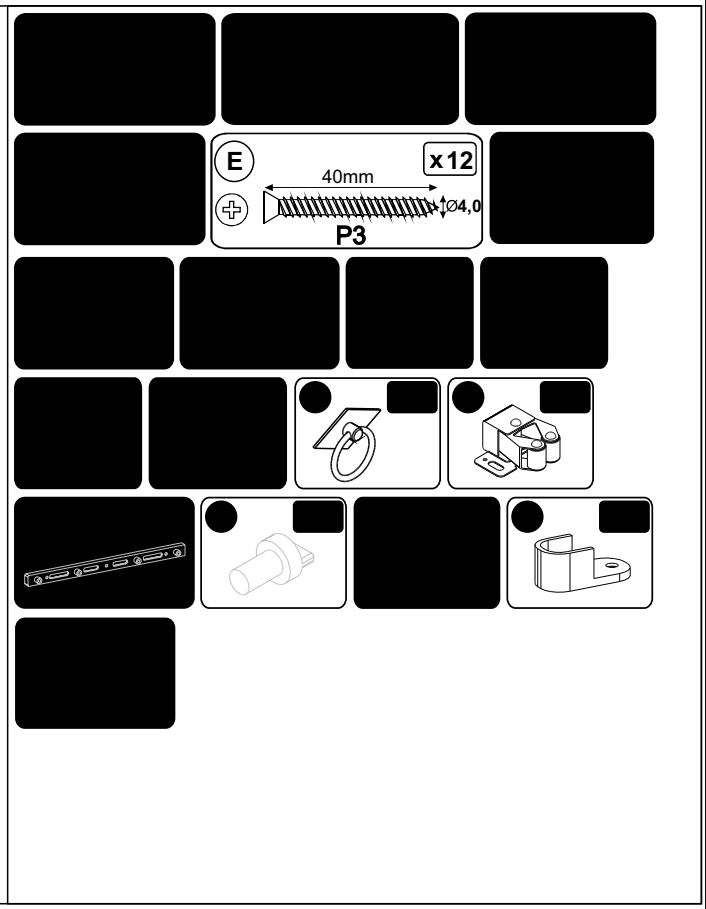


## BEFORE YOU START ASSEMBLY

Please check that you have all the correct parts and fittings as detailed on the assembly instructions.

**FOR DAMAGED/REPLACEMENT PARTS**
Please visit
**www.coreproducts.co.uk/parts**

Batch Number CRUZ- 462

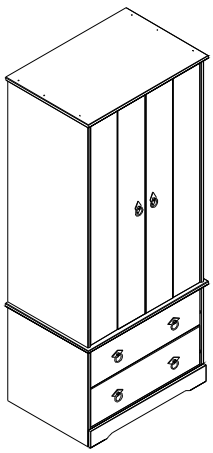

**PLEASE RETAIN THIS LEAFLET ALONG WITH YOUR DELIVERY NOTE/RECEIPT FOR FUTURE REFERENCE**

Produced in Brazil for Core Products Ltd Perth PH1 3DZ 03/2025

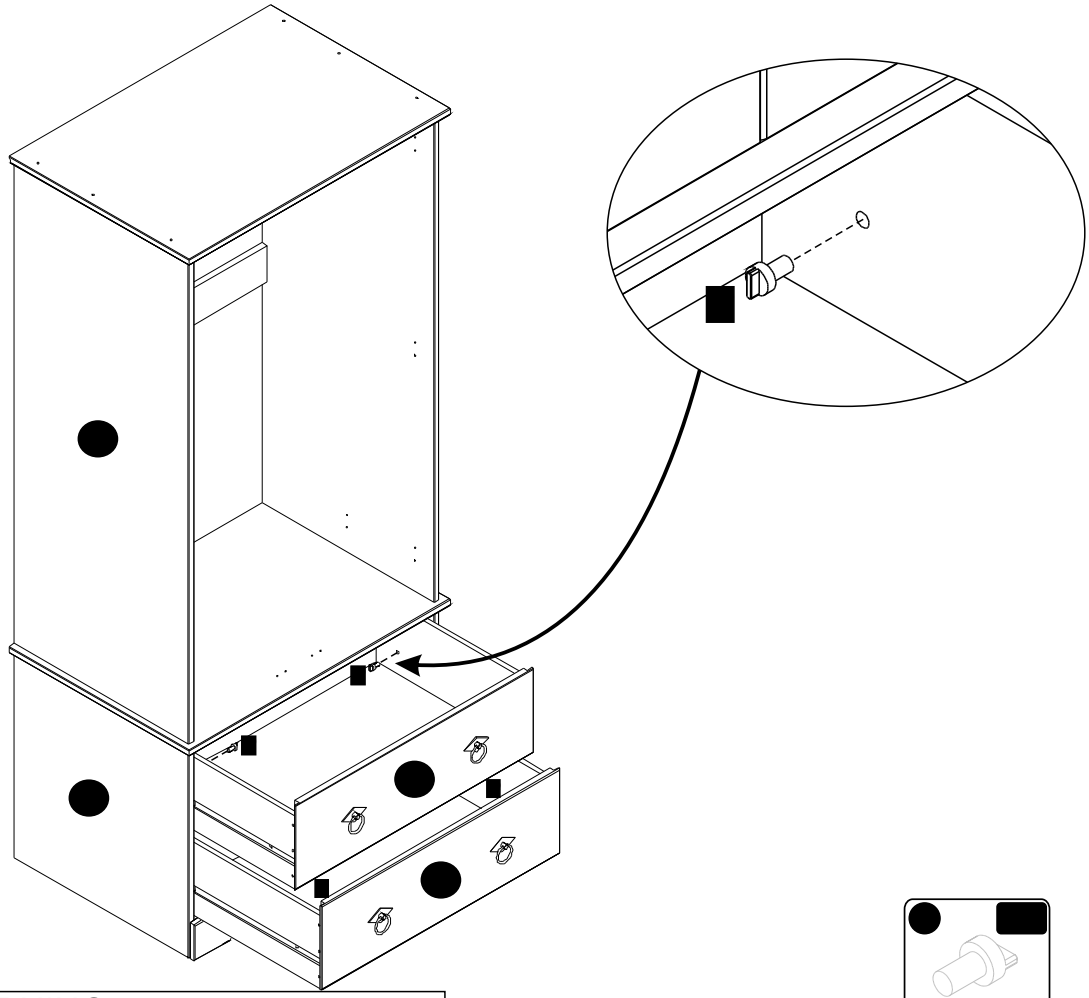

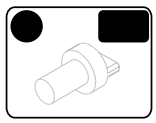

WARNING

For your safety please insert the plastic drawer stops.

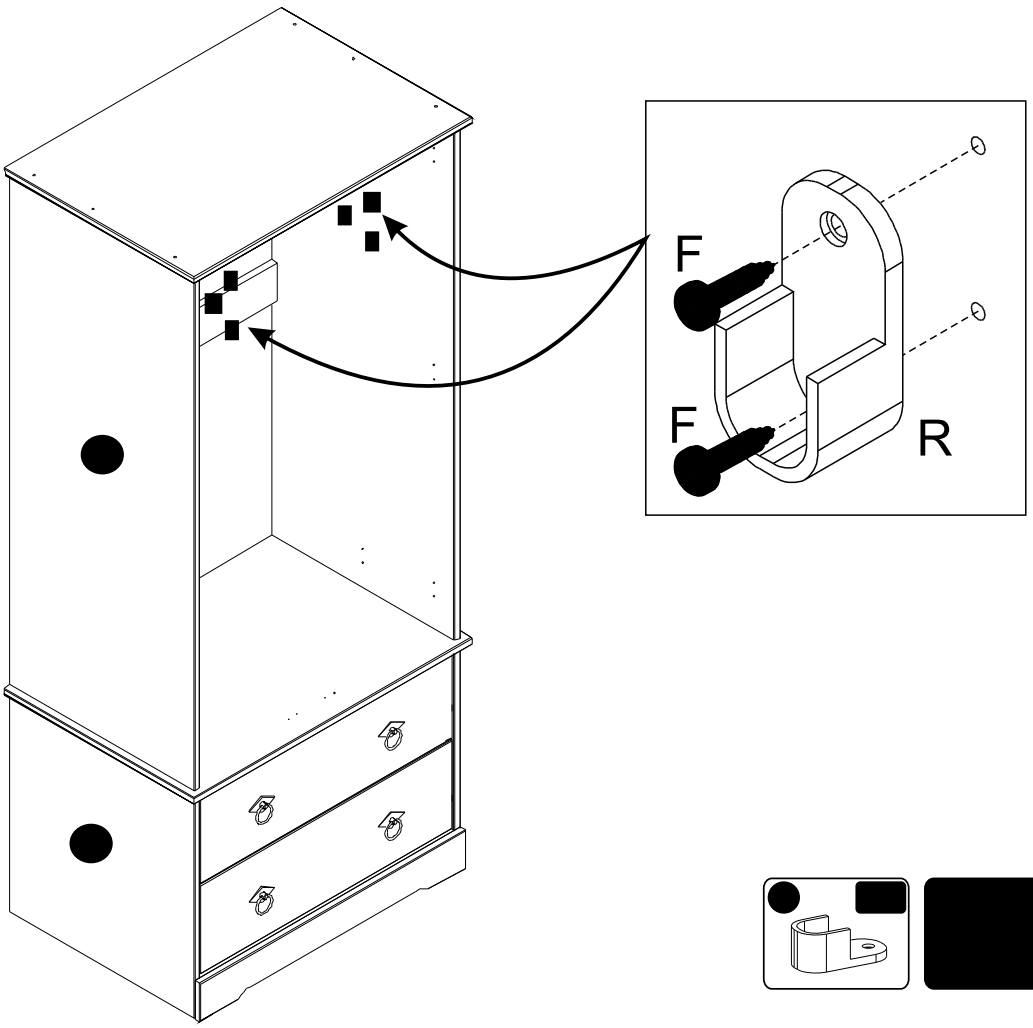

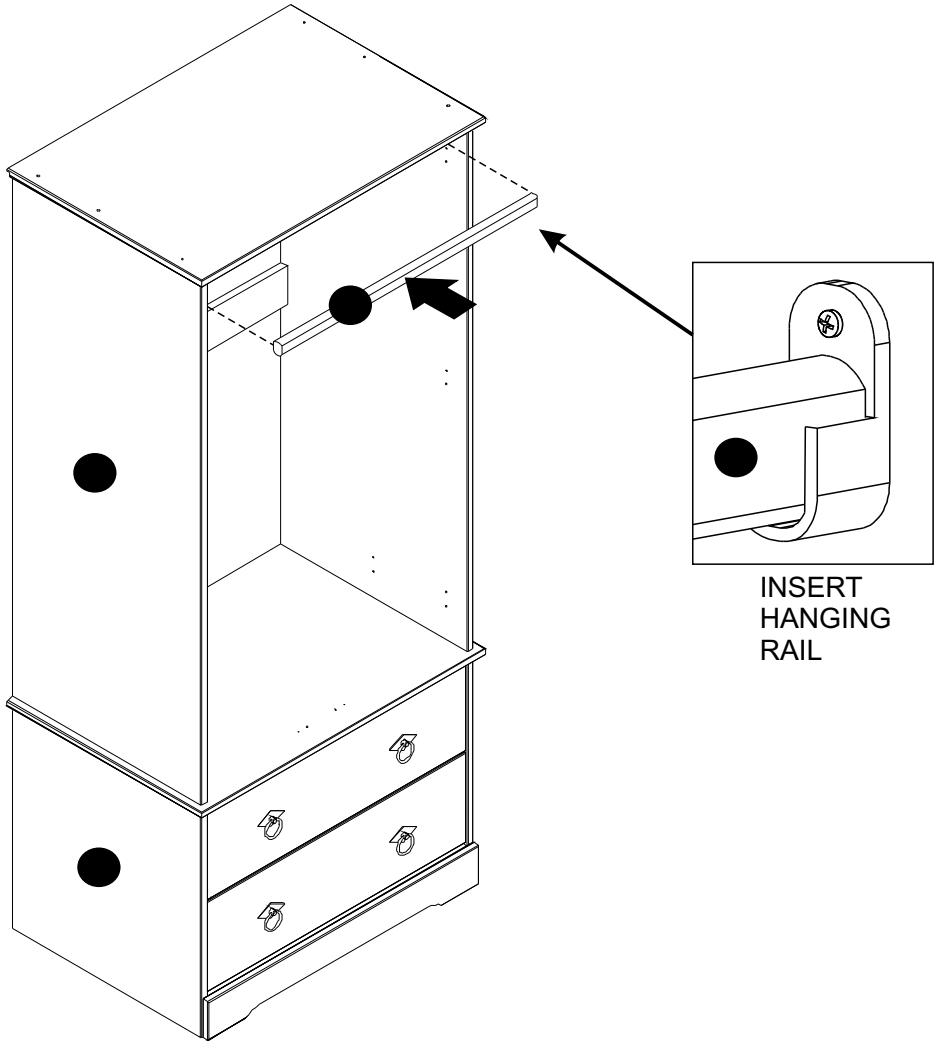
INSERT
HANGING
RAIL

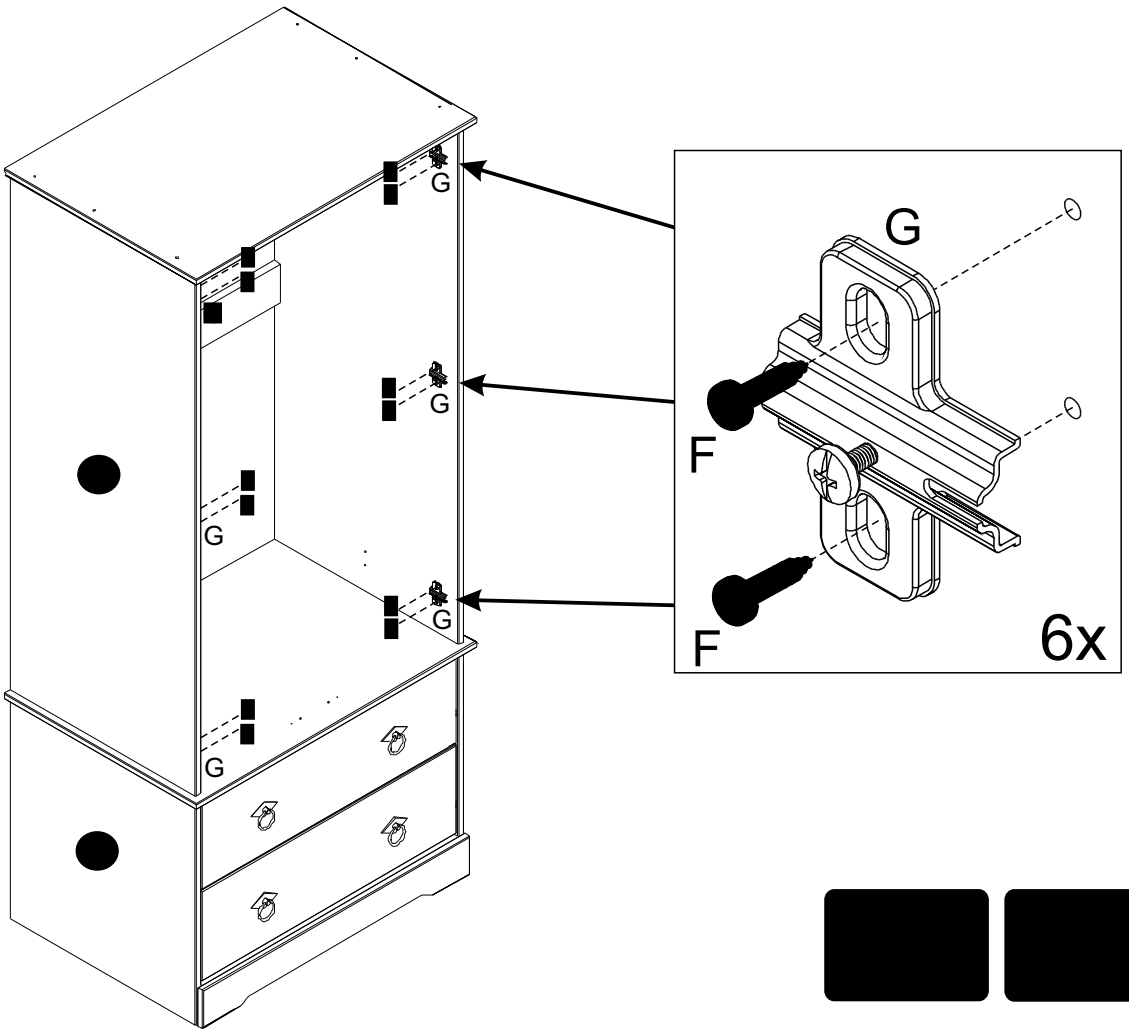
G
G
G
G
G
G
F
F
6x

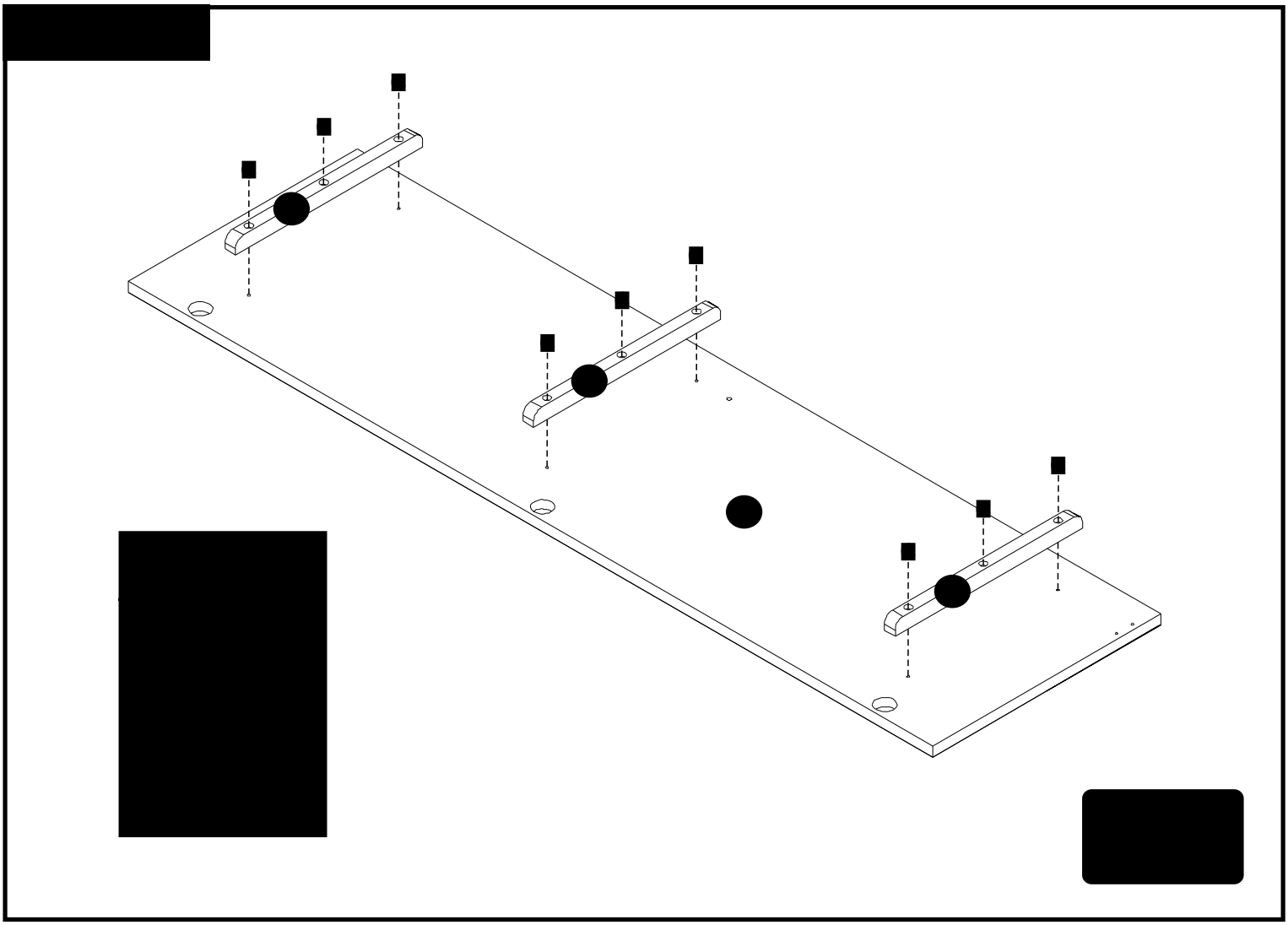

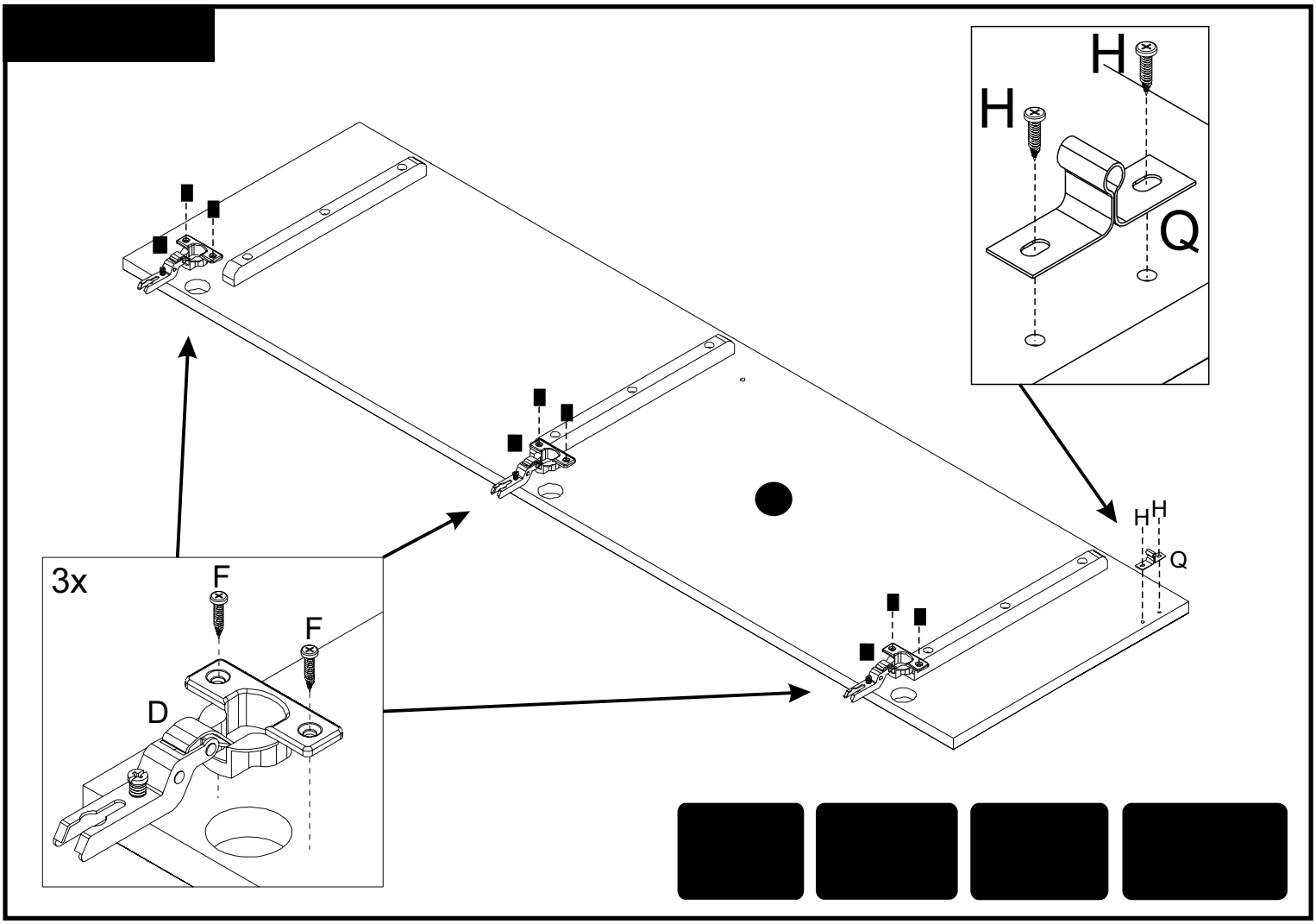
H
H
Q
H
H
Q
3x
F
F
D

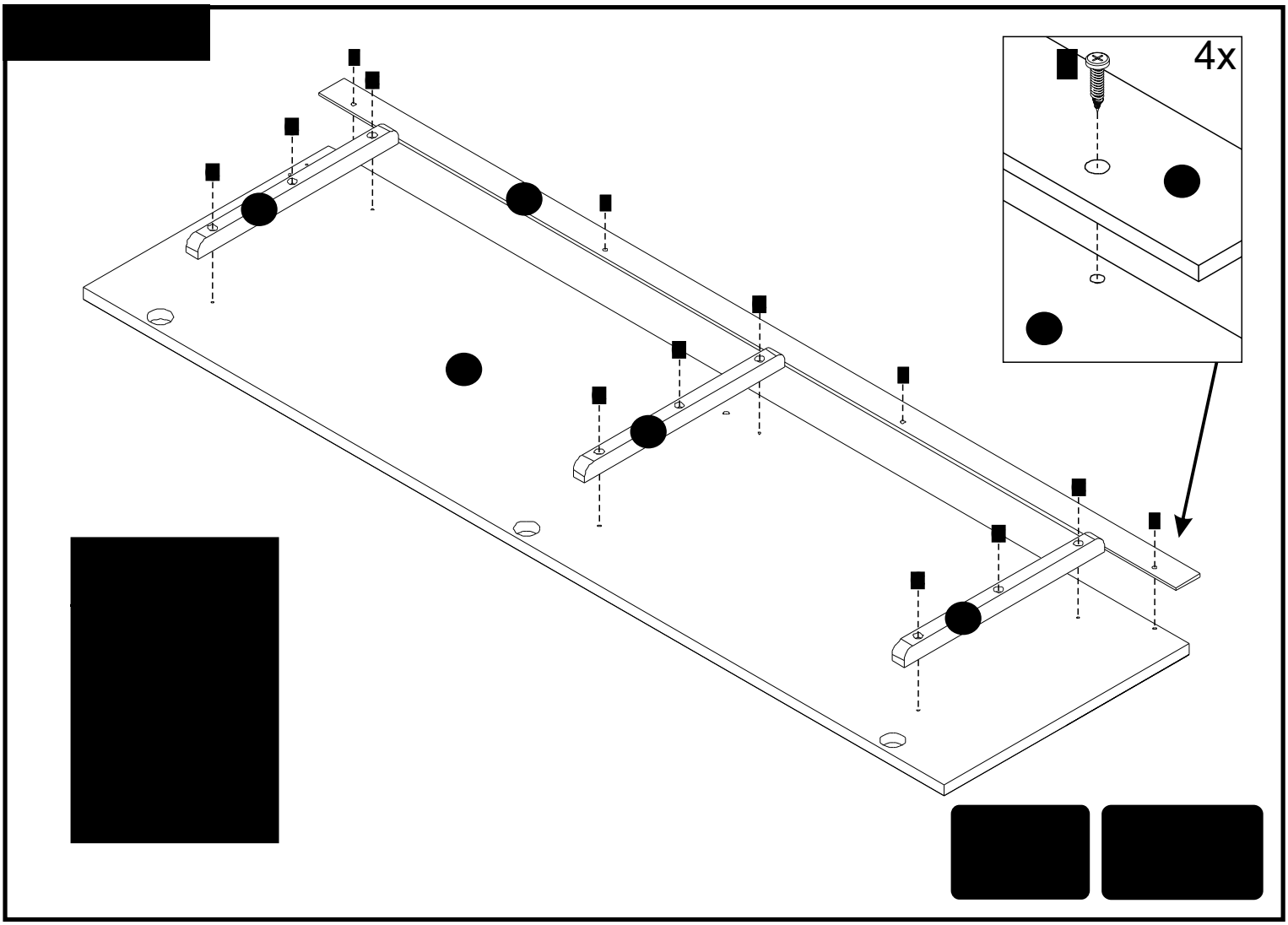
4x

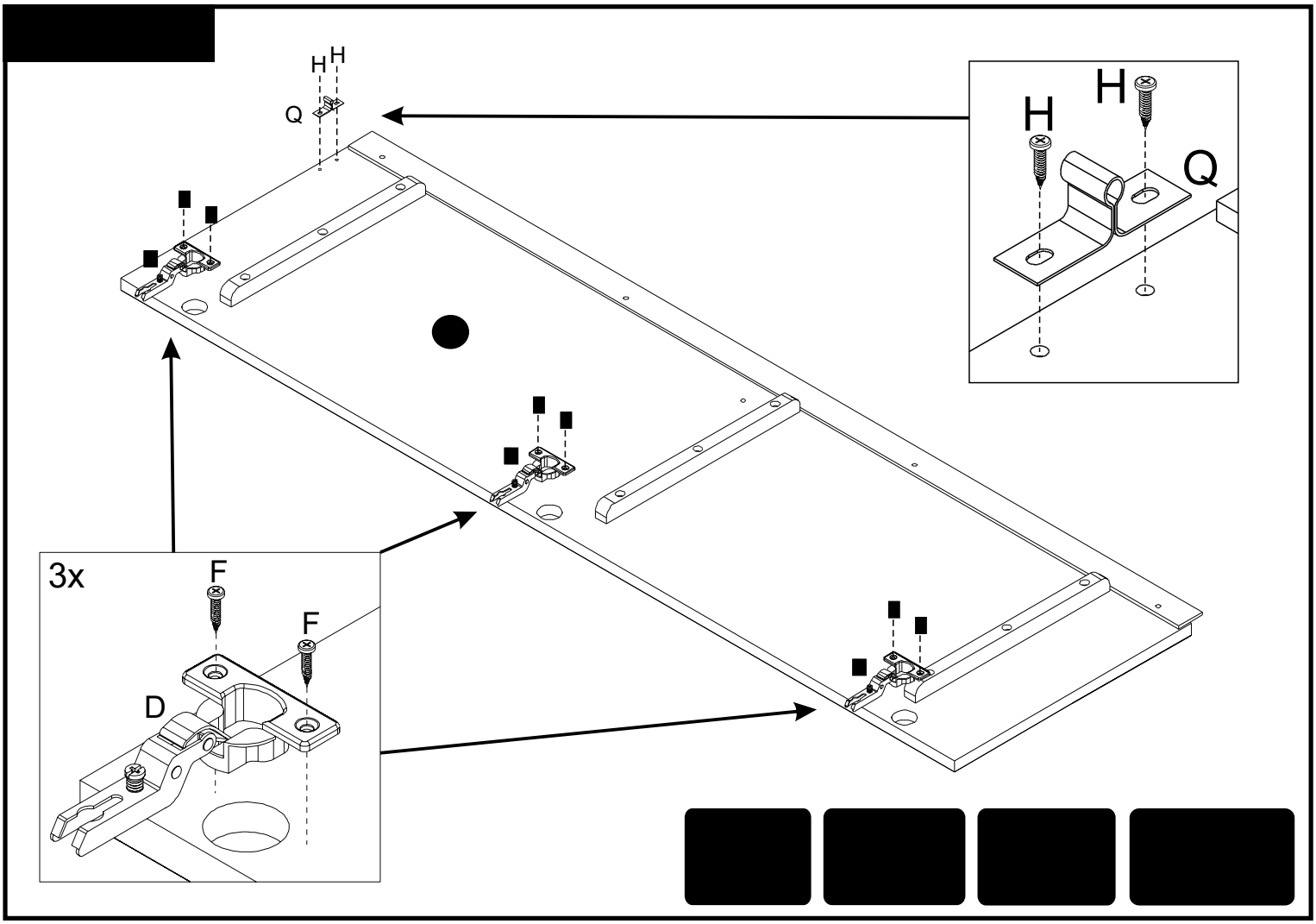
H
H
Q
H
H
Q
3x
F
F
D

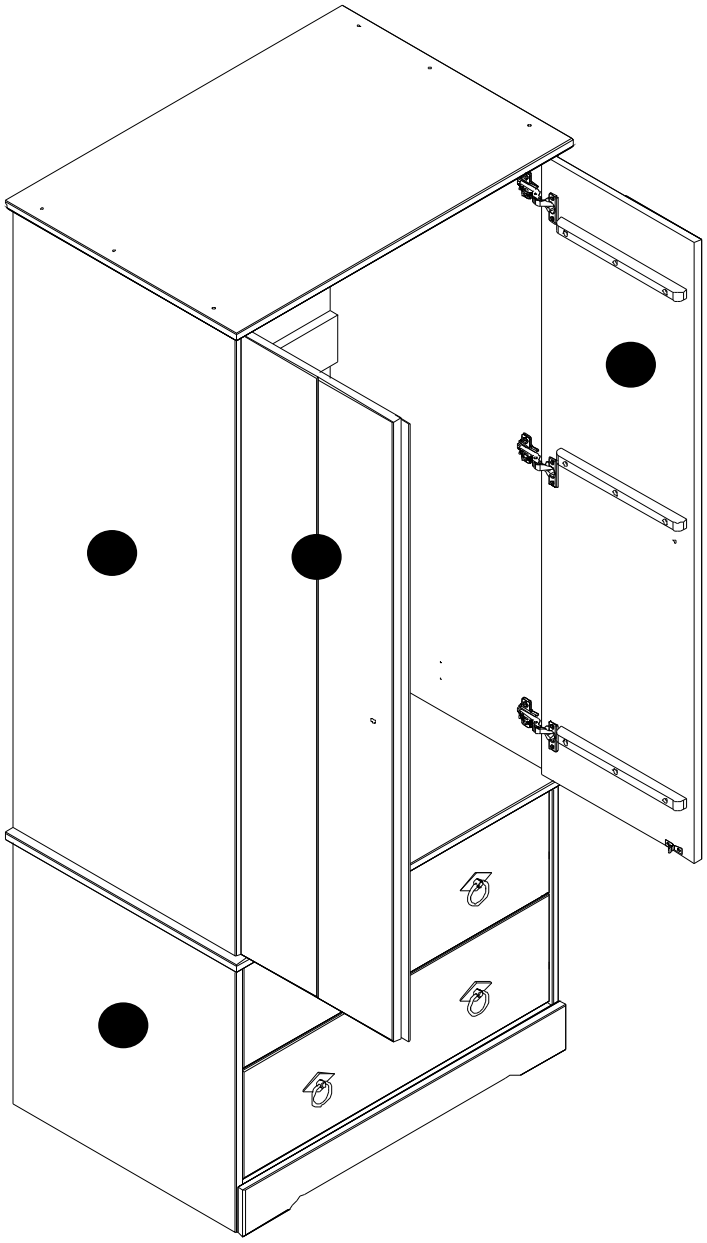

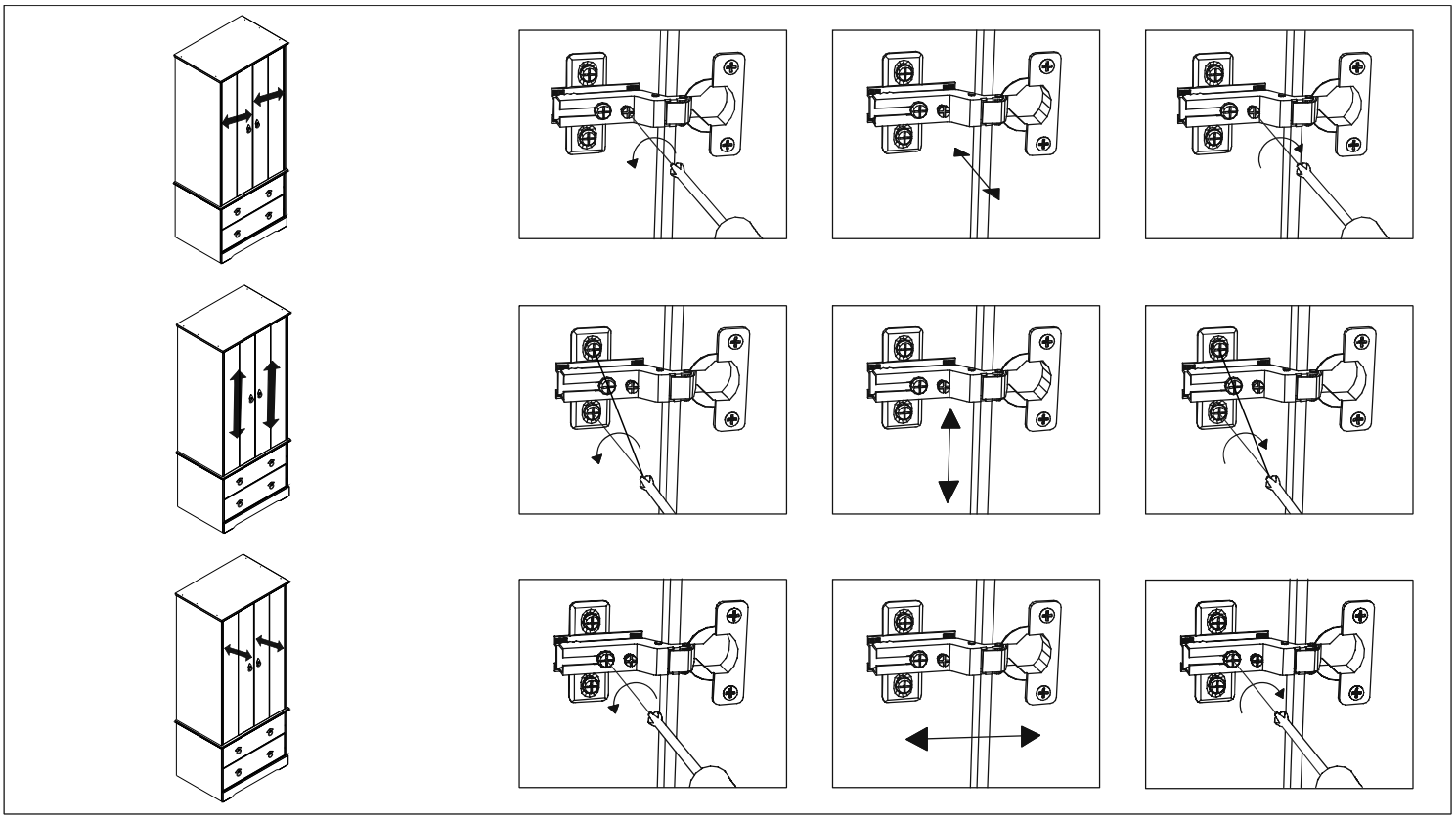

[redacted]

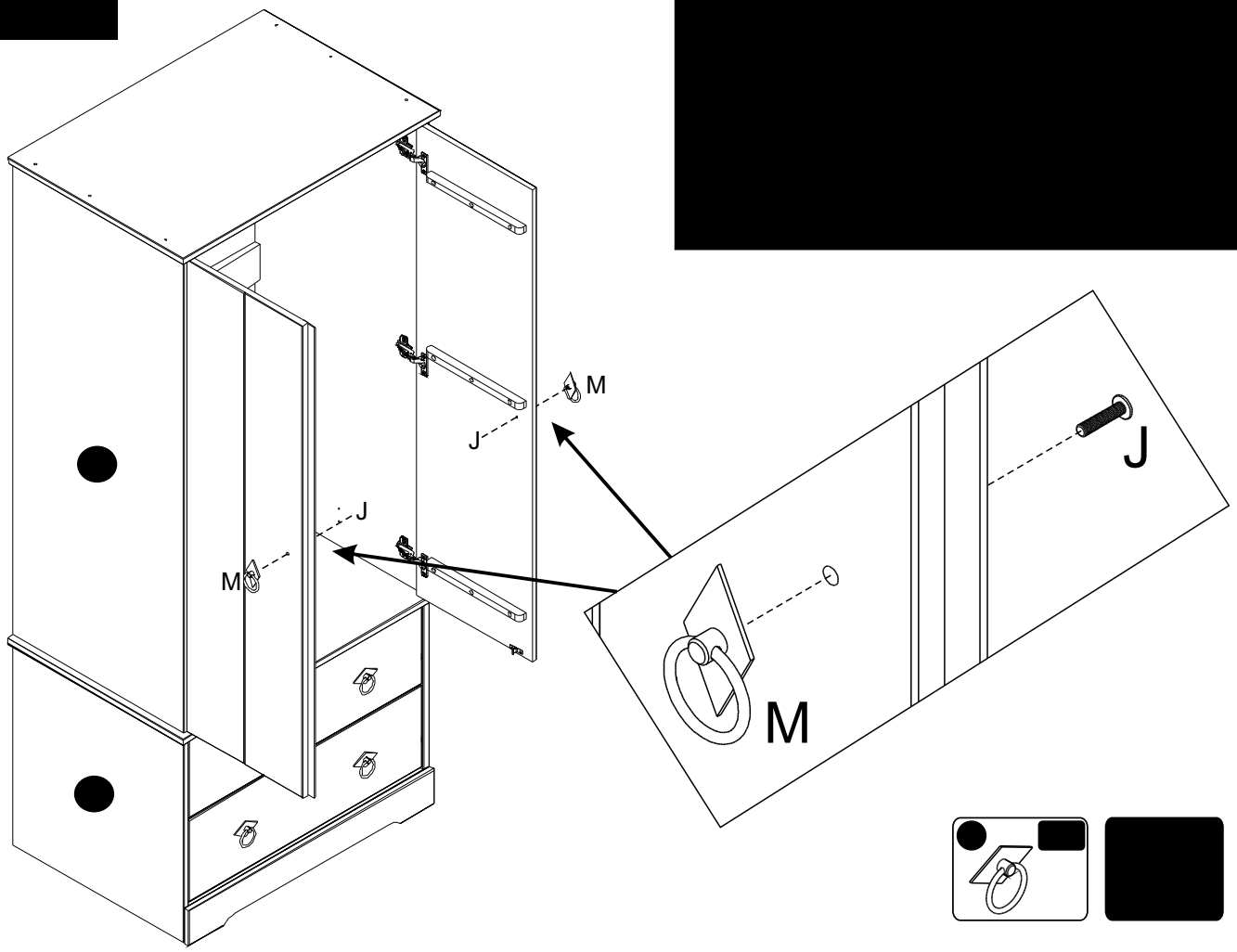


[redacted]

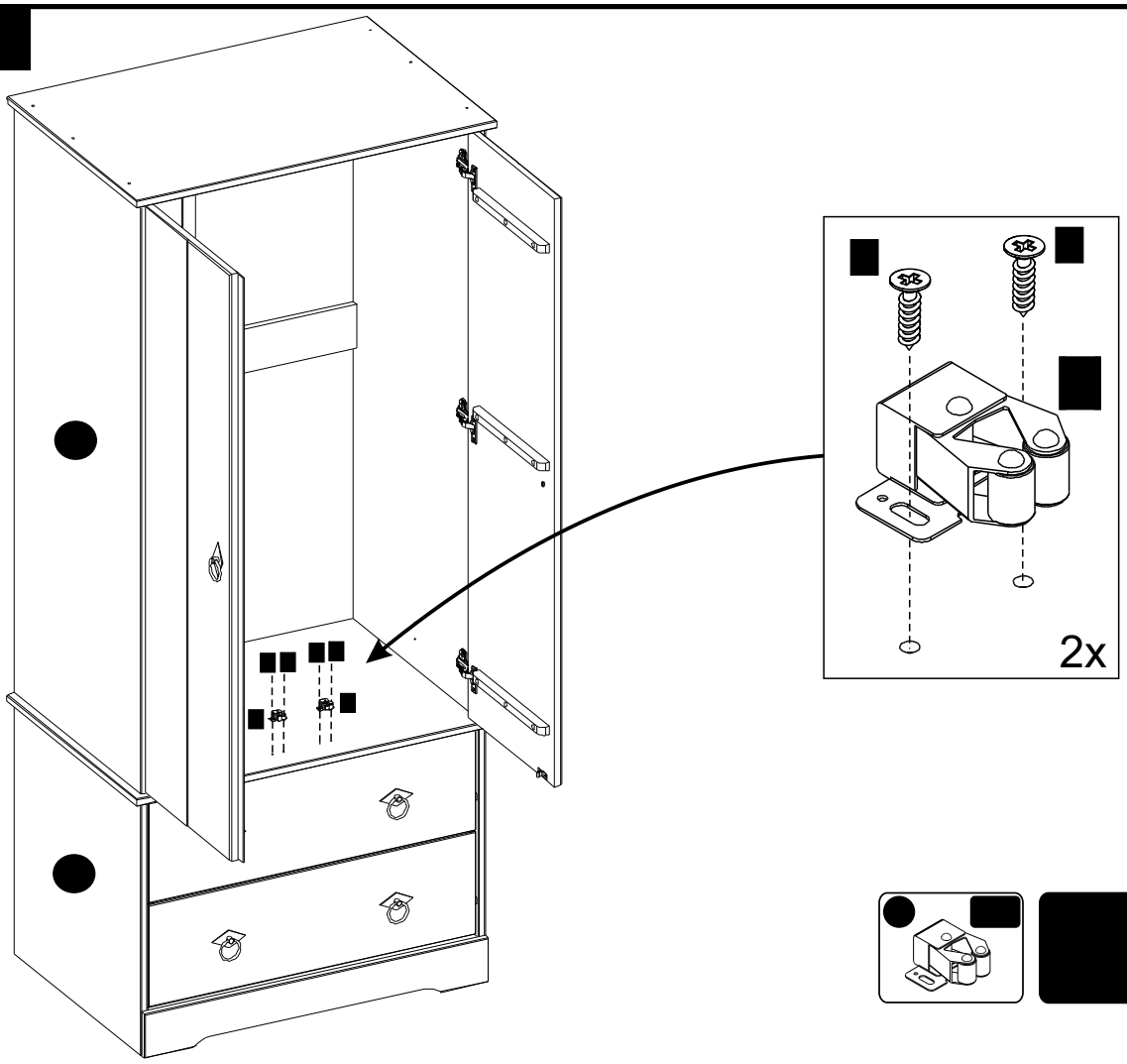

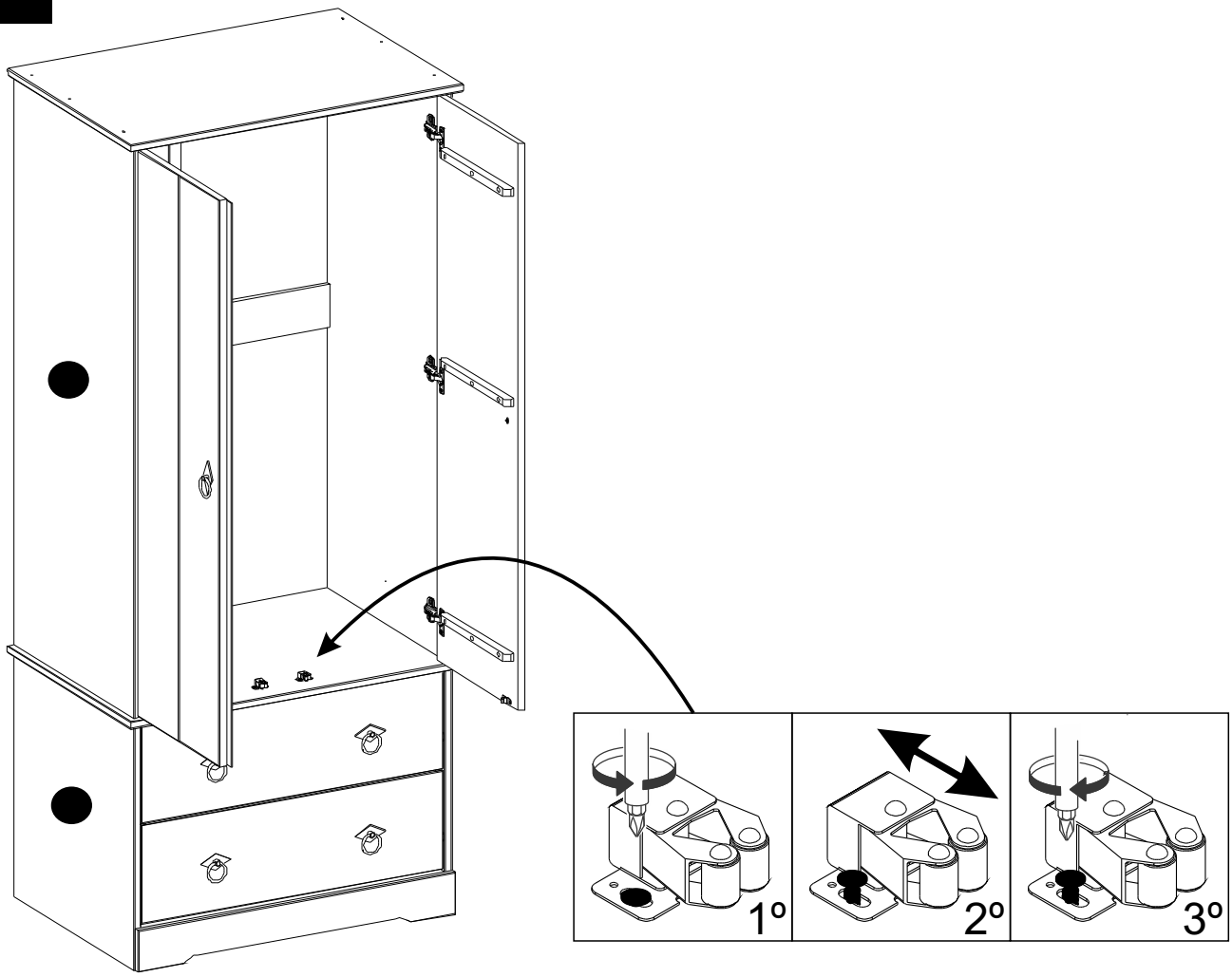


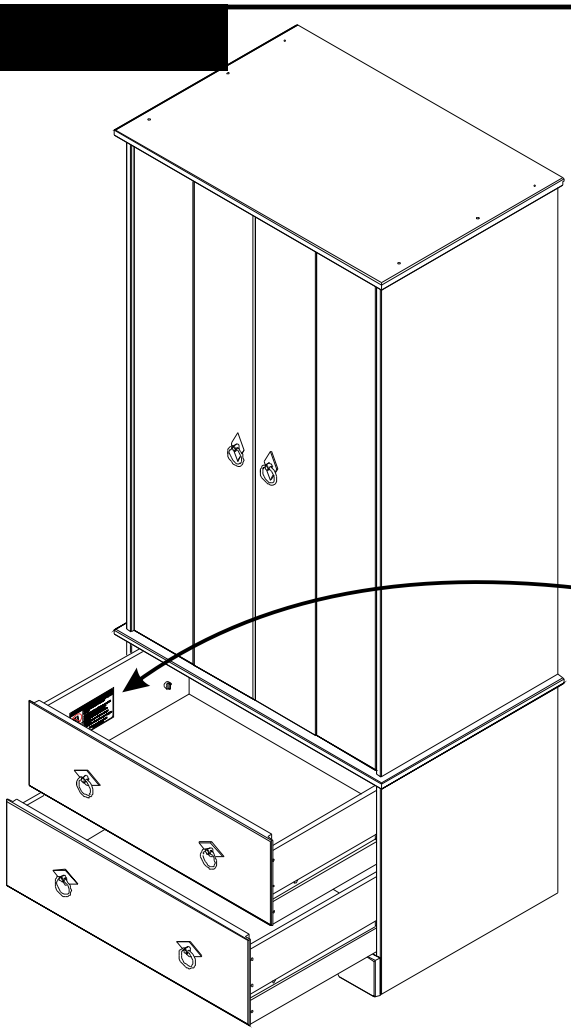

**Serious or fatal crushing injuries can occur from furniture tipover.**
**To help prevent tipover:**

- Install tipover restraint provided.
- Place heaviest items in the lower drawers.
- Uniess specifically designed to accommodate, do not set TVs or other heavy objects on top of this product.
- Never allow children to climb or hang on drawers, doors or shelves.
- Never open more than one drawer at a time.

Use of tipover restraints may only reduce, but not eliminate, the risk of tipover.

**This is a permanent label. Do not remove**

Install the warning sticker provided inside the top drawer.

## WALL ATTACHMENT

WARNING. Serious or fatal injuries can occur from furniture tipping over. To prevent this happening we recommend you permanently connect your furniture to a wall.
Never allow children to climb or hang on drawers.
Do not stand or sit on the unit.
Always place heaviest items in the lower drawers.
Do not open more than one drawer at a time.

A wall fixing kit is included which is adequate for most solid walls, for wood, cavity or other walls you will need to use different types of fixing which are not included, in these instances we strongly recommend you seek expert advice.

Before you start ensure the wall to be drilled has no concealed electrical wiring, water of gas pipework.

For brick or block walls the drill a hole with a 6mm masonry drill and fix with the fittings provided. If the fixing is not secure please use an alternative fitting (not supplied).

For wooden walls use an alternative screw fitting (not supplied).

For plasterboard os cavity walls special fittings will be required (not supplied).

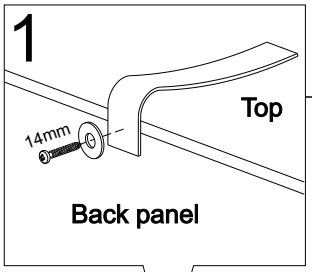


Attach wall fixing strap with screw and washer to the back of your unit.

For brick or block walls only.

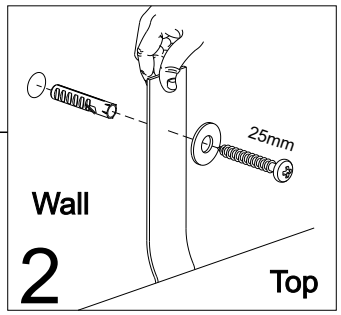

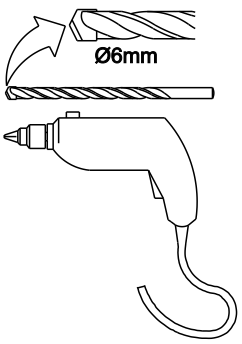


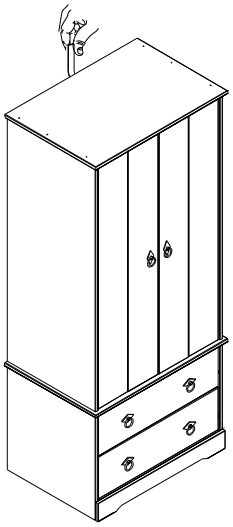

Using a drill make 1 hole into your wall and fix with either the wall plug, screw and washer provided or specialist wall fixing (not supplied).

CHECK THE FITTINGS OCCASIONALLY TO ENSURE THEY ARE STILL SECURE.