BP-46

Assembly Instruction

①

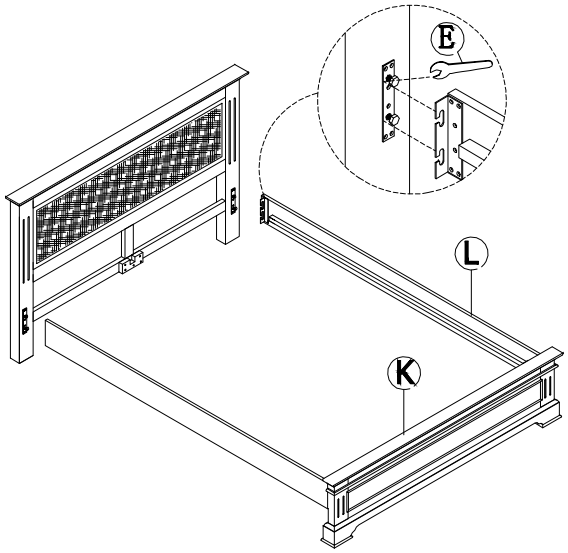

②

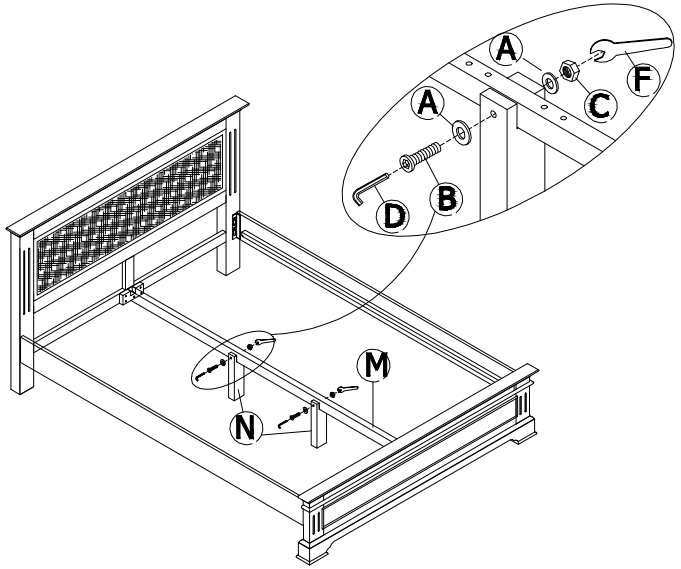

③

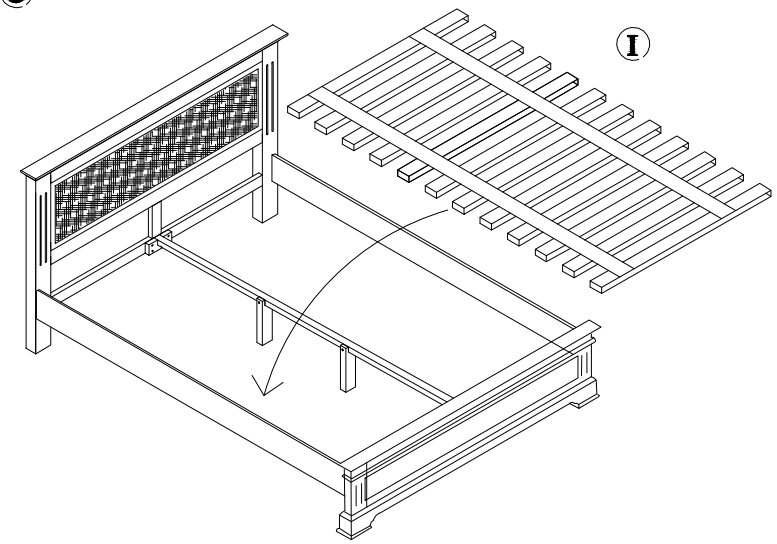

④

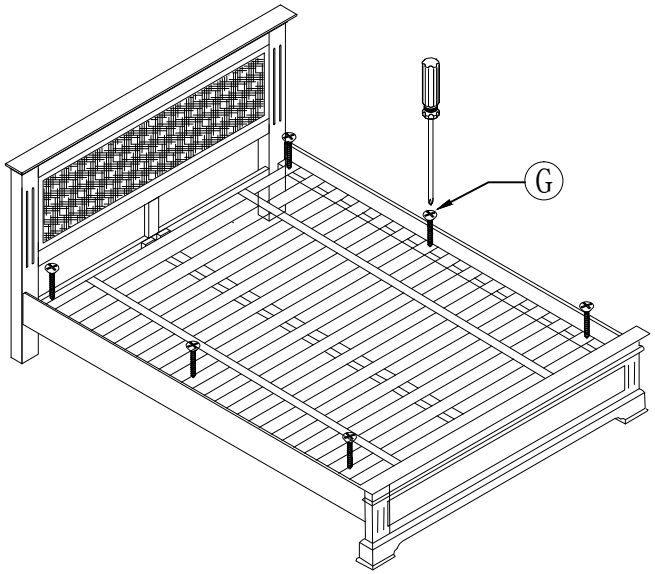

Components List

A	M8	4
B	M8*90	2
C	M8	2
D	M5	1
E	M18	1
F	M14	1
G	M3.5*30mm	6
I	W:1375mm	1
J		1
K		1
L	L:2020mm	2
M	L:1940mm	1
N	H:270mm	2