ASSEMBLY INSTRUCTION

BELLA CHAIR

Please read before you continue further.
PLEASE KEEP THE ORIGINAL PACKAGING UNTIL THE ITEM IS FULLY ASSEMBLED AND IN PLACE.IN TIME UNLIKELY EVENT THAT YOU NEED TO RETURN YOUR PRODUCT. IT MUST BE RETURNED IN ITS ORIGINAL PACKAGING TO AVOID FURTHER DAMAGE. FAILURE TO FOLLOW THESE PROCEDURES,NO RETURNS WILL BE ACCEPTED.
PLEASE ENSURE ALL LEGS ARE LEVEL ON YOUR FLOOR BEFORE FULLY TIGHTENING THE SCREWS. ALL CHAIRS HAVE SOME VARIANCE IN THE ASSEMBLY PROCESS TO ALLOW FOR UNEVENNESS IN THE MAJORITY OF DOMESTIC HOME FLOORS.

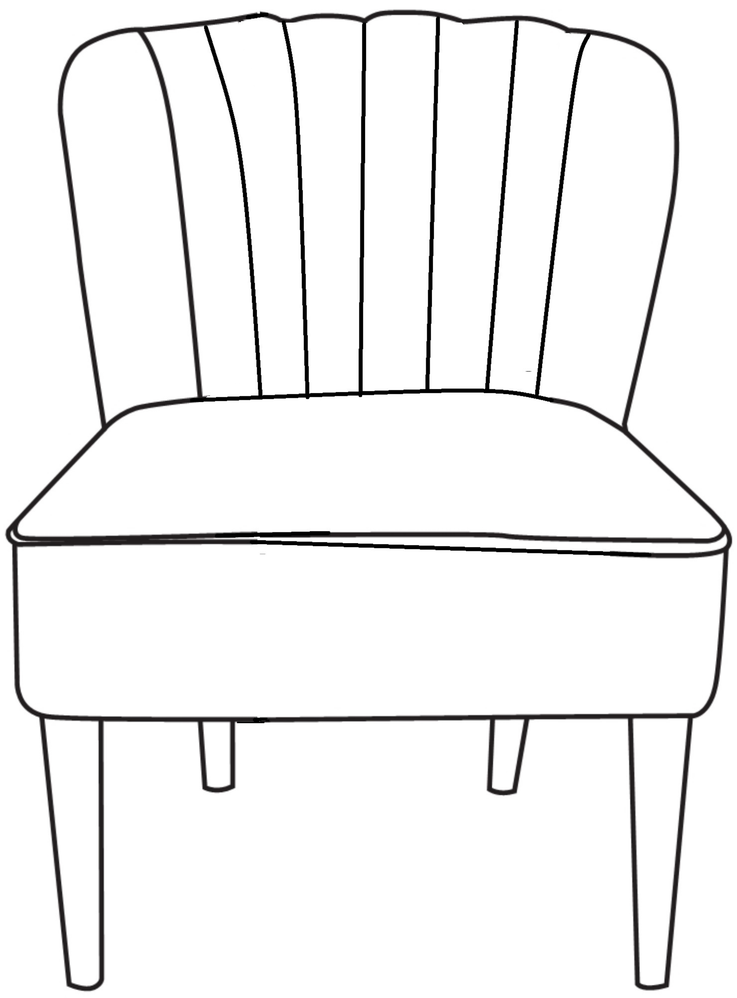

		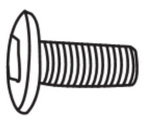	
①*1PC	②*4PCS	③*16PC	④*1PCS

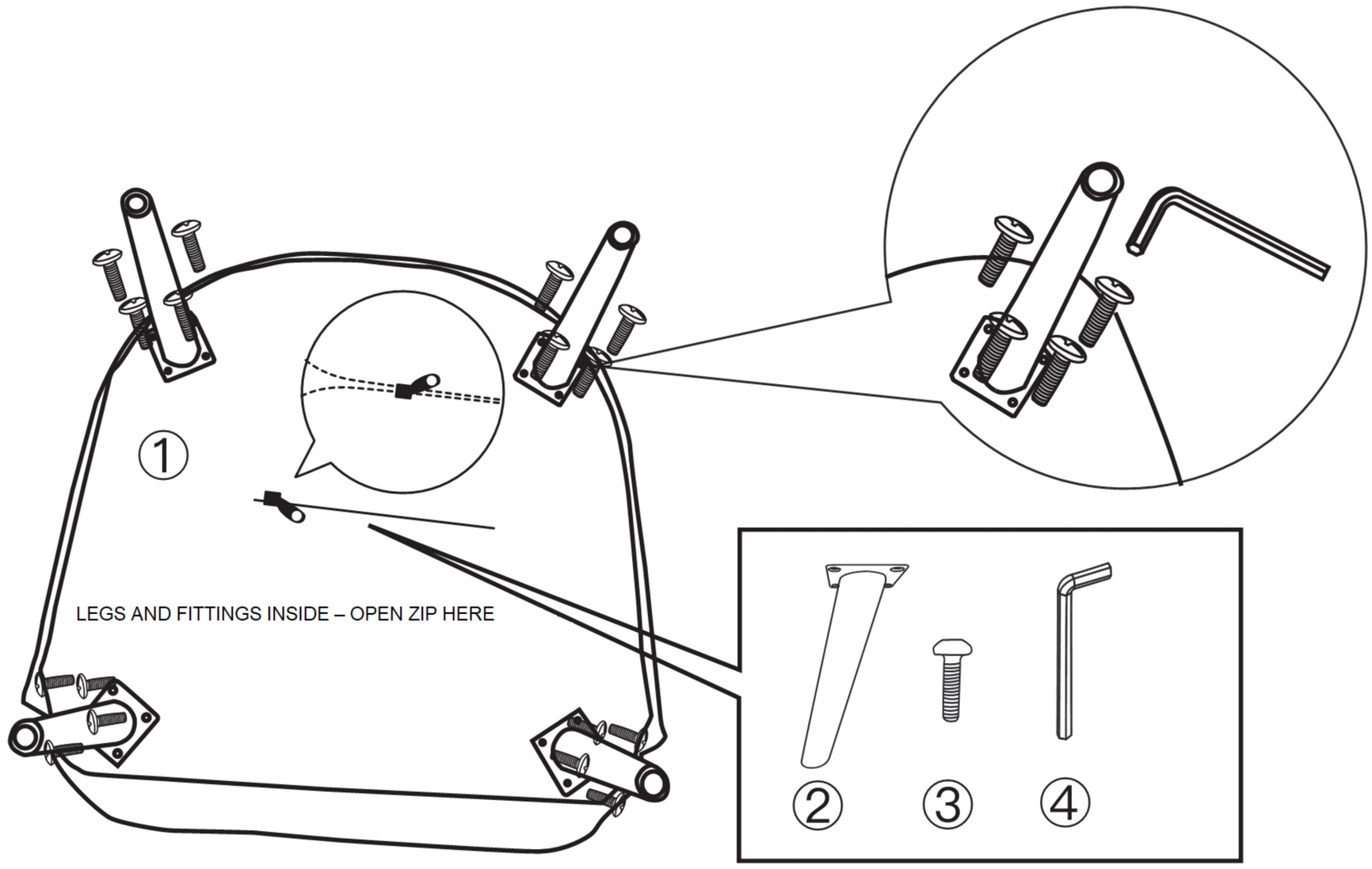

1

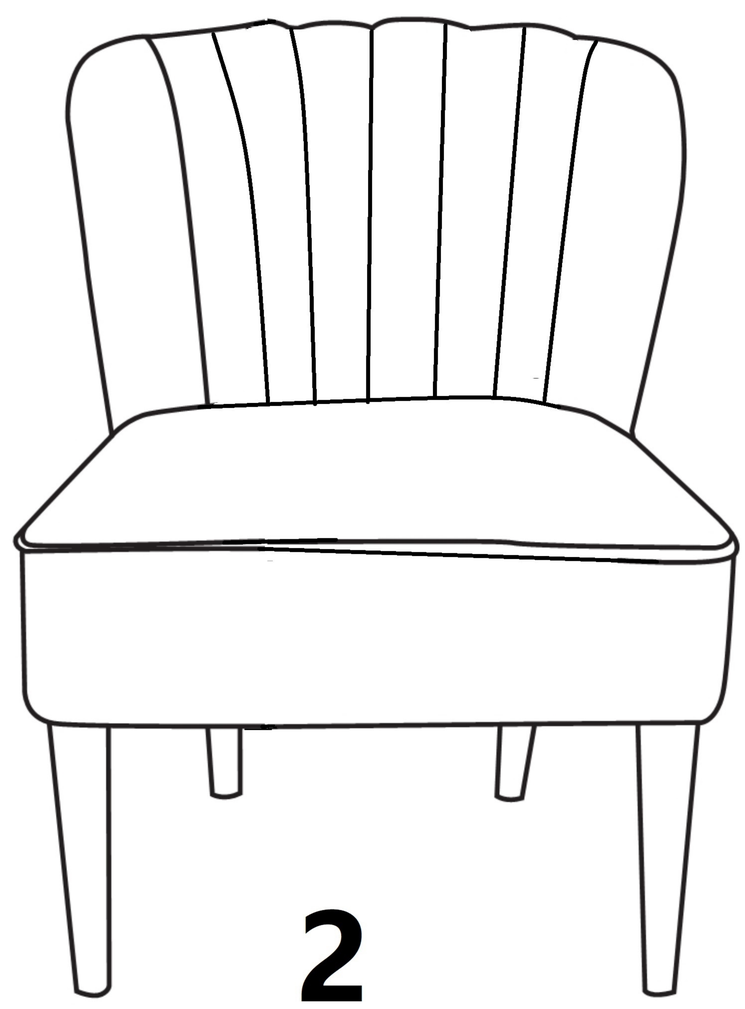

2

FABRIC CARE GUIDE

To avoid the colour on your fabric fading, please keep your piece of furniture out of direct sunlight
Velvet can be prone to slight marking caused by pressure or in use, these can be removed with a soft brush or gentle steaming
Do not use harsh detergents or cleaning fluids on your fabric to clean stains, use a damp cloth (water only)
To remove dust, please use the soft brush attachment on a Vacuum Cleaner.